Spraying device SV3
for vessel sight glasses PN 2,5

SV3



For sight glasses according to DIN 28120 for max. 2.5 barg.

USAGE

The Spraying device SV3 is used for the targeted cleaning of sight glasses in vessels, reactors, or process plants. It ensures a clear view for process monitoring and is suitable for intermittent or continuous operation.

Operating conditions:	
Temperature:	≤ 200 °C with PTFE gasket (standard) ≤ 400 °C with graphite gasket
Pressure:	max. 2.5 barg

INSTALLATION NOTE

Installation is performed by screwing the unit into the Base flange using pressure-resistant threaded connections with a form- and media-resistant intermediate gasket. For this purpose the Cover flange must be provided with a precisely matched axial through bore. The sealing of the connection threads shall be carried out on site using a sealing material suitable for the operating conditions (e.g. PTFE sealing tape or liquid thread sealant) to ensure a permanently pressure-tight connection.

DRAWING

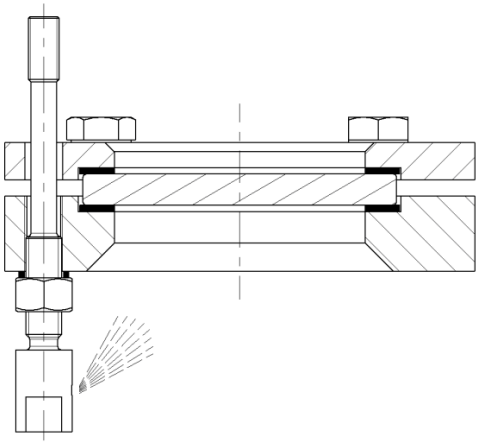

When selecting the cleaning medium, the resistance to temperature changes of the sight glass plate must be taken into account (see the respective data sheets of the glasses).

FLOW PARAMETERS

Flow parameters: Water, 20°C					
Pressure	[barg]	2	4	6	25
Flow velocity	[m/s]	20	28	35	71
Volume flow	[l/min]	3,8	5,3	6,5	13,3
Volume flow	[l/h]	226	320	392	800

The plant operator must ensure that the spray pressure of the flushing medium does not exceed the maximum permissible vessel pressure.

PARTS AND MATERIALS - TABLE

Parts and materials:		
1	Spraying device	1.4571
2	Gaskets	PTFE or graphite
3	Lock nut	A4-70

PRODUCT CODE

Example for Explaining the Code Composition

11 - SV3 - 1 - 2 - 00000

GROUP	TYPE	MATERIAL	CONNECTION	VARIANT
11	SV3	1) 1.4571	2) Threaded end G 1/4"	Standard
		9) Special		HT) High temperature

HT variant exclusively with graphite gasket

Unless otherwise specified, the highlighted factory standard will be supplied.

EXAMPLE

The product code 11-SV3-1-2-00000 corresponds to the standard version:
ACI Spraying device type SV3
for sight glasses of type 317 & 318
Spraying device 1.4571
Locknut A4-70
PTFE gaskets
Connection: threaded end G 1/8"

STRUCTURE

1. Spraying device
2. Lock nut
3. Gasket



ACI Industriearmaturen GmbH

info@aci24.com
www.aci24.com
Königskamp 19 · 52428 Jülich · Germany
+49 (0) 2461 91634 00
+49 (0) 2461 91634 44