# Round sight glass fitting Type 390 PN 16/250

## with Welding ends according to DIN EN 1092-1 Type 11

**Type 390**




EDELSTAHL Rostfrei INOX STAINLESS STEEL

With weld-on stub end according to DIN EN 1092-1 Type 11

## USAGE

Round sight glass fittings are used to observe and illuminate the interior of closed vessels (boilers, tanks, silos, etc.) or pipelines. Type 390 sight glass fittings are circular flange housings with spigots in accordance with DIN EN 1092-1 for welding, each completed with a sight glass plate inserted between the gaskets and firmly bolted.

| Operating conditions | | |
|---|---|---|
| Temperature: (dependent on glass and gasket) | ≤ 280 °C | Borosilicate glass (DIN 7080 or similar) |
| | > 280 °C | on request |
| Pressure: | ≤ 16 barg to 250 barg | |
| Low-temperature use as well as higher temperatures / pressures on request | | |

| Materials | |
|---|---|
| Base flange: | 1.4571; 1.4404; 1.4539; 1.4435; 1.4541; 1.4301/7; 1,4876; 1.4828; 2.4602; 2.4610 |
| Glass: | Borosilicate glass (DIN 7080 or similar) |
| Gasket[1]: | PTFE; FKM; NBR; C4400; Silicone; EPDM; Graphite |
| Screws: | A2-70 / A4-70 |
| Special materials on request | |

1) See table "Operating conditions"

## INSTALLATION NOTE

After welding the base flange, check whether the sealing surfaces have become distorted! If necessary, they must be reworked! Also observe the specified tightening torques for the bolted connections according to the operating and maintenance manual.

From PN 250 always with an additional mica protection disc

## DRAWING

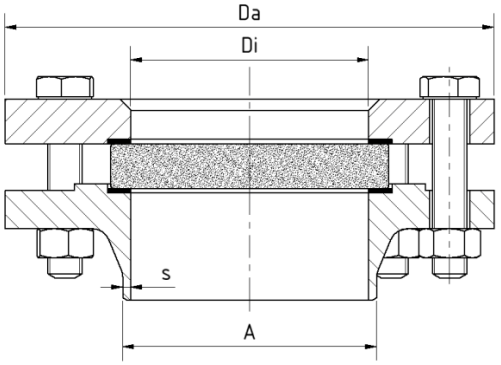

# Round sight glass fitting Type 390 PN 16/250

## with Welding ends according to DIN EN 1092-1 Type 11

**Type 390**

| PN | DN | Da [mm] | Di [mm] | A [mm] | s [mm] |
|---|---|---|---|---|---|
| PN 16 | 15 | 95 | 17 | 21,3 | 2 |
| | 20 | 105 | 22 | 26,9 | 2,3 |
| | 25 | 115 | 28 | 33,7 | 2,6 |
| | 32 | 140 | 37 | 42,4 | 2,6 |
| | 40 | 150 | 43 | 48,3 | 2,6 |
| | 50 | 165 | 54 | 60,3 | 2,9 |
| | 65 | 185 | 70 | 76,1 | 2,9 |
| | 80 | 200 | 83 | 88,9 | 3,2 |
| | 100 | 220 | 107 | 114,3 | 3,6 |
| | 125 | 250 | 132 | 139,7 | 4 |
| | 150 | 285 | 160 | 168,3 | 4,5 |
| | 200 | 340 | 207 | 219,1 | 6,3 |
| PN 10 | 250 | 405 | 260 | 273 | 6,3 |
| | 300 | 460 | 310 | 323,9 | 7,1 |
| PN 6 | 350 | 520 | 340 | 355,6 | 8 |
| PN 40 | 15 | 95 | 17 | 21,3 | 2 |
| | 20 | 105 | 22 | 26,9 | 2,3 |
| | 25 | 115 | 28 | 33,7 | 2,6 |
| | 32 | 140 | 37 | 42,4 | 2,6 |
| | 40 | 150 | 43 | 48,3 | 2,6 |
| | 50 | 165 | 54 | 60,3 | 2,9 |
| | 65 | 185 | 70 | 76,1 | 2,9 |
| | 80 | 200 | 83 | 88,9 | 3,2 |
| | 100 | 235 | 107 | 114,3 | 3,6 |
| | 125 | 270 | 132 | 139,7 | 4 |
| | 150 | 300 | 160 | 168,3 | 4,5 |
| | 200 | 375 | 207 | 219,1 | 6,3 |
| PN 63 | 15 | 105 | 17 | 21,3 | 2 |
| | 20 | 130 | 22 | 26,9 | 2,6 |
| | 25 | 140 | 28 | 33,7 | 2,6 |
| | 32 | 155 | 37 | 42,4 | 2,9 |
| | 40 | 170 | 42 | 48,3 | 2,9 |
| | 50 | 180 | 54 | 60,3 | 2,9 |
| | 65 | 220 | 69 | 76,1 | 3,6 |
| | 80 | 230 | 81 | 88,9 | 4,0 |
| | 100 | 250 | 106 | 114,3 | 4 |
| | 125 | 315 | 127 | 139,7 | 6,3 |
| | 150 | 355 | 154 | 168,3 | 7,1 |

| PN | DN | Da [mm] | Di [mm] | A [mm] | s [mm] |
|---|---|---|---|---|---|
| PN 100 | 15 | 130 | 15 | 21,3 | 3,2 |
| | 20 | 130 | 22 | 26,9 | 2,6 |
| | 25 | 140 | 28 | 33,7 | 2,6 |
| | 32 | 155 | 37 | 42,4 | 2,9 |
| | 40 | 170 | 42 | 48,3 | 2,9 |
| | 50 | 195 | 54 | 60,3 | 3,2 |
| | 65 | 220 | 66 | 76,1 | 5,0 |
| | 80 | 230 | 76 | 88,9 | 6,3 |
| | 100 | 300 | 99 | 127 | 14,2 |
| | 125 | 340 | 120 | 152,4 | 16 |
| 160 | 25 | 140 | 28 | 33,7 | 2,9 |
| | 40 | 170 | 41 | 48,3 | 3,6 |
| | 50 | 200 | 48 | 60,3 | 6,3 |
| | 65 | 230 | 60 | 76,1 | 8 |
| | 80 | 255 | 80 | 101,6 | 11 |
| 250 | 25 | 150 | 27 | 33,7 | 3,6 |
| | 40 | 220 | 40 | 60,3 | 10 |
| | 50 | 235 | 51 | 76,1 | 12,5 |
| | 65 | 290 | 70 | 101,6 | 16 |

# Round sight glass fitting Type 390 PN 16/250

## with Welding ends according to DIN EN 1092-1 Type 11

**Type 390**

## PRODUCT CODE

Example for Explaining the Code Composition

**11 - 390 - 9 - 16 - 2 - 1 - 4 - 000**

| GROUP | TYPE | NOMINAL SIZE | PN | BASE FLANGE[1] | GLASS | GASKET | VARIANT |
|---|---|---|---|---|---|---|---|
| 11 | 390 | 1) 15 | 1) 16 | 2) 1.4571 | 1) Borosilicate glass according to DIN 7080 or similar. | 1) PTFE | 000) Standard |
| | | 2) 20 | 2) 40 | 3) 1.4404 | 4) 4) Borosilicate glass[2] + PTFE wiper SGW | 2) FKM | |
| | | 3) 25 | 3) 63 | 4) 1.4301/7 | 5) Borosilicate glass[2] + Silicone wiper SGW | 3) NBR | |
| | | 4) 32 | 4) 100 | 5) 1.4539 | 8) Borosilicate glass untempered | 4) C4400 | |
| | | 5) 40 | 5) 160 | 7) 1.4435 | | 5) Silicone | |
| | | 6) 50 | 6) 250 | 8) 1.4541 | | 6) EPDM | |
| | | 7) 65 | | 9) Sonder | | 7) Graphite | |
| | | 8) 80 | | | | 8) Special | |
| | | 9) 100 | | | | | |
| | | 10) 125 | | | | | |
| | | 11) 150 | | | | | |
| | | 12) 200 | | | | | |
| | | 13) 250 | | | | | |
| | | 14) 300 | | | | | |
| | | 15) 350 | | | | | |

1) Cover flange according to offer / order confirmation
2) According to or in accordance with DIN 7080

Unless otherwise specified, the highlighted factory standard will be supplied.

## EXAMPLE

**The product code 11-390-9-1-2-1-4-000 corresponds to the standard configuration:**
ACI Type 390,
DN 100
PN 16
Base flange made of 1.4571
Cover flange made of 1.4571
Borosilicate glass according to DIN 7080
Gasket KlingerSil® C4400

## STRUCTURE

1. Screws
2. Cover flange
3. Glass pad
4. Sight glass
5. Gasket
6. Base flange
7. Nuts

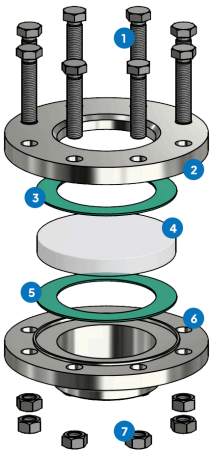


For aggressive media, FEP- or Halar® coated sight glass plates can be used.

# Round sight glass fitting Type 390 PN 16/250

**with Welding ends according to DIN EN 1092-1 Type 11**

**Type 390**

## QUICK OVERVIEW

- max. 250 barg
- heat-resistant up to 280 °C
- for liquid media
- for gaseous media
- Nominal sizes DN 15 - 350
- Custom-made designs possible
- > 50 gasket materials
- Accessories available

## OPERATING CONDITIONS

| | | SIGHT GLASS | GASKETS | | | | | | |
|---|---|---|---|---|---|---|---|---|---|
| | | **Borosilicate glass** (DIN 7080 or similar) | **PTFE** max. 200 °C | **FKM** max. 200 °C | **NBR** max. 80 °C | **C4400** max. 175 °C | **Silicone** max. 180 °C | **EPDM** max. 130 °C | **Graphite** > 400 °C |
| TEMPERATURE | up to 80 °C | ✓ | ✓ | ✓ | ✓ | ✓ | ✓ | ✓ | ✓ |
| | up to 130 °C | ✓ | ✓ | ✓ | ✗ | ✓ | ✓ | ✓ | ✓ |
| | up to 150 °C | ✓ | ✓ | ✓ | ✗ | ✓ | ✓ | ✗ | ✓ |
| | up to 175 °C | ✓ | ✓ | ✓ | ✗ | ✓ | ✓ | ✗ | ✓ |
| | up to 200 °C | ✓ | ✓ | ✓ | ✗ | ✗ | ✗ | ✗ | ✓ |
| | up to 280 °C | ✓ | ✗ | ✗ | ✗ | ✗ | ✗ | ✗ | ✓ |
| | > 280 °C | On request | On request | | | | | | |
| PRESSURE | up to 16 barg | ✓ | ✓ | ✓ | ✓ | ✓ | ✓ | ✓ | ✓ |
| | up to 40 barg | ✓ | ✓ | ✗ | ✗ | ✓ | ✗ | ✗ | ✓ |
| | up to 63 barg | ✓ | ✗ | ✗ | ✗ | ✗ | ✗ | ✗ | ✓ |
| | up to 100 barg | ✓ | ✗ | ✗ | ✗ | ✗ | ✗ | ✗ | ✓ |
| | up to 160 barg | ✓ | ✗ | ✗ | ✗ | ✗ | ✗ | ✗ | ✓ |
| | up to 250 barg | ✓ | ✗ | ✗ | ✗ | ✗ | ✗ | ✗ | ✓ |

✓ suitable ✗ unsuitable

## OPTIONAL ACCESSORIES

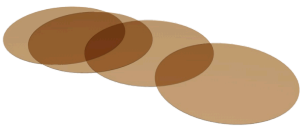

**Round mica discs**

> up to 320 °C with Borosilicate glass DIN 7080

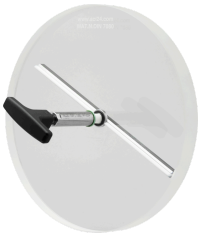

**Sight glass wiper**

> with PTFE, silicone, EPDM or FKM wipers



**PLEXIGLAS Impact protection window**

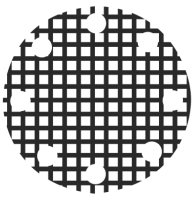

**Grid impact protection window**



**Metal fused safety sight glass**

> for safety applications



**LED lights**

> for Ex and non-Ex areas



**FEP protective screen / coating**

> for high pH values

**ACI Industriearmaturen GmbH**

info@aci24.com
+49 (0) 2461 91634 00
www.aci24.com
+49 (0) 2461 91634 44
Königskamp 19 · 52428 Jülich · Germany