Circular sight glass fitting type 390 PN 16/320

with welding ends according to DIN EN 1092-1 type 11

Type 390

With welding ends according to DIN EN 1092-1 type 11

USAGE

Round sight glass fittings are used for observing and illuminating the interiors of closed containers (boilers, tanks, silos, etc.) or pipelines. Type 390 sight glass fittings are round flange fittings with welding ends according to DIN EN 1092-1 for welding, completed with a sight glass plate inserted between the seals and tightly bolted.

Operating condition		
Temperature: (dependent on glass and gasket)	≤ 280 °C	Borosilicate glass (DIN 7080 or similar)
	> 280 °C	on request
Pressure:	≤ 16 barg to 320 barg	
Low temperature applications as well as higher temperatures / pressures on request		

Materials	
Base flange:	1.4571; 1.4404; 1.4539; 1.4435; 1.4541; 1.4301/7; 1,4876; 1.4828; 2.4602; 2.4610
Glass:	Borosilicate glass (DIN 7080 or similar)
Gasket[1]:	PTFE; FKM; NBR; C4400; Silicone; EPDM; Graphite
Screws an nuts:	A2-70 / A4-70
Special materials upon request	

1) See „INFO Gaskets“

INSTALLATION NOTE

After welding the base flange, it must be checked whether the sealing surfaces have warped! If necessary, rework must be done! Also, pay attention to the specified torques for the bolting according to the working and maintenance instructions.

From PN 250 always with additional mica protection

DRAWING

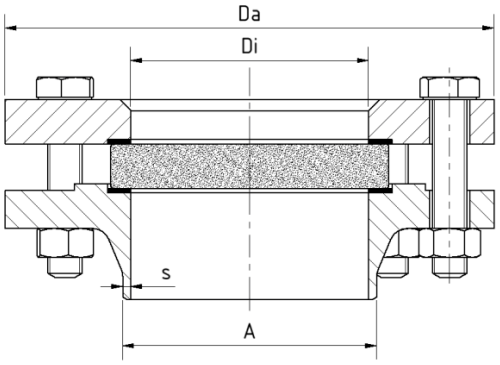

Circular sight glass fitting type 390 PN 16/320

with welding ends according to DIN EN 1092-1 type 11

PN	DN	Da [mm]	Di [mm]	A [mm]	s [mm]	Weight [kg]
16	15	95	17	21.3	2	1.6
	20	105	22	26.9	2.3	2.3
	25	115	28	33.7	2.6	2.7
	32	140	37	42.4	2.6	4.0
	40	150	43	48.3	2.6	4.5
	50	165	54	60.3	2.9	5.3
	65	185	70	76.1	2.9	6.4
	80	200	83	88.9	3.2	9.9
	100	220	107	114.3	3.6	9.7
	125	270	132	139.7	4	19.1
	150	300	160	168.3	4.5	24.9
PS 10[1]	200	375	207	219.1	6.3	46.4
PS 6[1]	250	425	259	273	7.1	51.6
	300	485	308	323.9	8	69.1
	350	555	339	355.6	8	105.2
40	15	95	17	21.3	2	1.6
	20	105	22	26.9	2.3	2.3
	25	115	8	33.7	2.6	2.7
	32	140	37	42.4	2.6	4.0
	40	150	43	48.3	2.6	4.5
	50	165	54	60.3	2.9	6.0
	65	185	70	76.1	2.9	8.0
	80	200	83	88.9	3.2	10.2
	100	235	107	114.3	3.6	13.9
	125	270	132	139.7	4	19.9
	150	300	160	168.3	4.5	25.8
	200	375	2007	219.1	6.3	49.4
63	15	105	17	21.3	2	2.5
	20	130	22	26.9	2.6	4.3
	25	140	28	33.7	2.6	5.5
	32	155	37	42.4	2.9	6.8
	40	170	43	48.3	2.9	8.7
	50	180	54	60.3	2.9	9.6
	65	205	70	76.1	3.2	12.2
	80	215	82	88.9	3.6	14.3
	100	250	106	114.3	4	20.3
	125	295	131	139.7	4.5	31.8
	150	345	157	168.3	5.6	46.8

Circular sight glass fitting type 390 PN 16/320

with welding ends according to DIN EN 1092-1 type 11

PN	DN	Da [mm]	Di [mm]	A [mm]	s [mm]	Weight [kg]
100	15	105	17	21.3	2	2.5
	20	130	22	26.9	2.6	4.4
	25	140	28	33.7	2.6	5.5
	32	155	37	42.4	2.9	6.8
	40	170	43	48.3	2.9	8.7
	50	195	54	60.3	3.2	12.5
	65	220	69	76.1	3.6	16.7
	80	230	81	88.9	4	19.1
	100	265	104	114.3	5	28.4
	125	315	127	139.7	6.3	45.0
160	15	105	17	21.3	2	2.5
	25	140	28	33.7	2.9	5.5
	40	170	41	48.3	3.6	9.4
	50	195	52	60.3	4	13.5
	65	230	60	76.1	8	26.4
	80	225	79	101.6	11	34.8
250	15	130	16	21.3	2.6	5.3
	25	150	27	33.7	3.6	7.6
	40	185	38	48.3	5	14.0
	50	200	48	60.3	6.3	17.8
	65	230	60	76.1	8	26.5
320	15	130	15	21.3	3.2	5.3
	25	160	24	33.7	5	10.6
	40	195	36	48.3	6.3	17.6
	50	210	48	63.5	8	22.2

PRODUCT CODE

Example for Explaining the Code Composition

11 - 390 - 9 - 16 - 2 - 1 - 4 - 0

GROUP	TYPE	NOMINAL SIZE	PN	BASE FLANGE[1]	GLASS	GASKET	VARIANT
11	390	1) 15	1) 16	2) 1.4571	1) Borosilicate glass according to DIN 7080 or similar	1) PTFE	0) Standard
		2) 20	2) 40	3) 1.4404	4) Borosilicate glass[2] + PTFE wiper SGW	2) FKM	
		3) 25	3) 63	4) 1.4301/7	5) Borosilicate glass[2] + silicone wiper SGW	3) NBR	
		4) 32	4) 100	5) 1.4539	8) Borosilicate glass untempered	4) C4400	
		5) 40	5) 160	7) 1.4435		5) Silicone	
		6) 50	6) 250	8) 1.4541		6) EPDM	
		7) 65	7) 320	9) Special		7) Graphite	
		8) 80				8) Special	
		9) 100					
		10) 125					
		11) 150					
		12) 200					
		13) 250					
		14) 300					
		15) 350					

1) Cover flange according to quotation / order confirmation
2) Similar to DIN 7080

Unless otherwise specified, the highlighted factory standard will be delivered.

EXAMPLE

The product code 11-390-9-1-2-1-4-0 corresponds to the standard version:
ACI Type 390,
DN 100
PN 16
Base flange made of 1.4571
Cover flange made of 1.4571
Borosilicate glass according to DIN 7080
Gasket KlingerSil® C4400

STRUCTURE

1. Screws
2. Cover flange
3. Glass cushion
4. Sight glass
5. Gasket
6. Base flange
7. Nuts

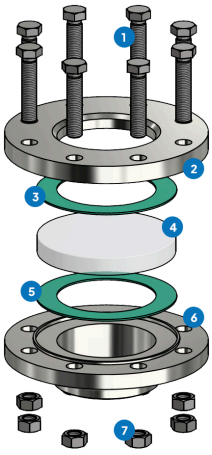

For aggressive media, FEP or Halar® coated sight glass plates can be used.

QUICK OVERVIEW

- max. 320 barg
- heat resistant up to 280 °C
- for liquid media
- for gaseous media
- Nominal sizes DN 15 - 350
- Custom made design possible
- > 50 gasket materials
- Accessories available

OPERATING CONDITIONS

		SIGHT GLASS	GASKETS						
		Borosilicate glass (DIN 7080 etc.)	**PTFE** max. 200 °C	**FKM** max. 200 °C	**NBR** max. 80 °C	**C4400** max. 175 °C	**Silicone** max. 180 °C	**EPDM** max. 130 °C	**Graphite** > 400 °C
TEMPERATURE	up to 80 °C	✓	✓	✓	✓	✓	✓	✓	✓
	up to 130 °C	✓	✓	✓	✗	✓	✓	✓	✓
	up to 150 °C	✓	✓	✓	✗	✓	✓	✗	✓
	up to 175 °C	✓	✓	✓	✗	✓	✓	✗	✓
	up to 200 °C	✓	✓	✓	✗	✗	✗	✗	✓
	up to 280 °C	✓	✗	✗	✗	✗	✗	✗	✓
	> 280 °C	On request	On request						
PRESSURE	up to 16 barg	✓	✓	✓	✓	✓	✓	✓	✓
	up to 40 barg	✓	✓	✗	✗	✓	✗	✗	✓
	up to 63 barg	✓	✗	✗	✗	✗	✗	✗	✓
	up to 100 barg	✓	✗	✗	✗	✗	✗	✗	✓
	up to 160 barg	✓	✗	✗	✗	✗	✗	✗	✓
	up to 250 barg	✓	✗	✗	✗	✗	✗	✗	✓
	up to 320 barg	✓	✗	✗	✗	✗	✗	✗	✓

✓ suitable ✗ unsuitable

OPTIONAL ACCESSORIES

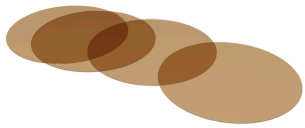

Round mica discs

> up to 320 °C with Borosilicate glass DIN 7080

Sight glass wiper

> with PTFE, silicone, EPDM or FKM wipers

PLEXIGLAS Impact protection window

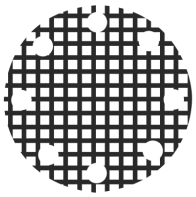

Grid impact protection window

Metal fused safety sight glass

> for safety applications

LED lights

> for Ex and non-Ex areas

FEP protective screen / coating

> for high pH values

ACI Industriearmaturen GmbH

info@aci24.com
www.aci24.com
Königskamp 19 · 52428 Jülich · Germany
+49 (0) 2461 91634 00
+49 (0) 2461 91634 44