INDUSTRIEARMATUREN

Round Sight glass fitting Type 392 PN 16/160

with External thread / male thread for screwing in

Type 392



EDELSTAHL Rostfrei INOX STAINLESS STEEL

With threaded connection according to DIN EN ISO 228-1

USAGE

Sight glass fittings type 392 with screw-in connectors are designed to be screwed into pipelines, boilers, tanks and apparatus of all kinds. They are suitable wherever visual inspection of filling or flow is required. They are equally suitable for liquids and gases. Sight glass fittings are particularly recommended for custom designs in a variety of application areas.

INSTALLATION NOTE

The fitting must be sealed with an appropriate sealing compound in order to achieve the specified pressure rating. The connection thread is not designed to be self-sealing!

DRAWING

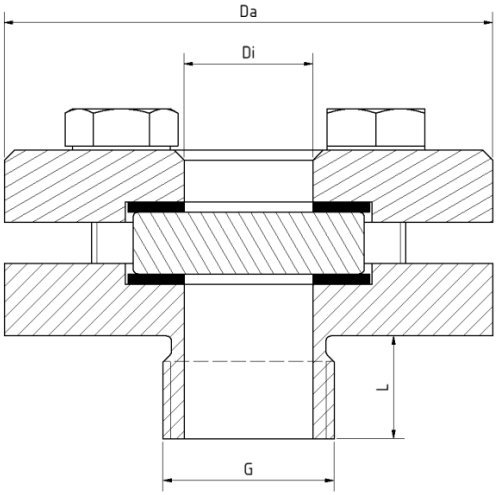

Operating conditions		
Temperature: (depending on glass and gasket)	≤ 280 °C	Borosilicate glass (DIN 7080 or si
Pressure:	≤ 16 barg to 160 barg	
Higher pressures possible on request		
Low-temperature applications as well as higher temperatures/pressures on r		

Materials	
Base flange:	1.4571; 1.4404
Glass:	Borosilicate glass (DIN 7080 or similar)
Gasket[1]:	PTFE; FKM; NBR; C4400; Silicone; EPDM; Graphite
Bolts:	A2-70 / A4-70
Special materials on request	

1) See „INFO Gaskets“

Round Sight glass fitting Type 392 PN 16/160

with External thread / male thread for screwing in

Type 392

PN	G	Da [mm]	Di [mm]	L [mm]
16	½“	70	15	20
	1“	95	25	20
	1½“	110	40	20
	2“	110	40	20
40	½“	70	15	20
	1“	95	25	20
	1½“	110	40	20
	2“	110	40	20
63	½“	70	15	20
	1“	95	25	20
	1½“	110	40	20
	2“	110	40	20
100	½“	70	15	15
	1“	100	25	18
	1½“	115	37,5	20
	2“	115	40	20
160	½“	70	15	15
	1“	100	25	18
	1½“	115	37,5	20
	2“	115	40	20
Other sizes and pressure ratings on request				
Assembly using hook wrench as for DIN 11851				

Round Sight glass fitting Type 392 PN 16/160

with External thread / male thread for screwing in

Type 392

PRODUCT CODE

Example for Explaining the Code Composition

11 - 392 - 2 - 1 - 2 - 1 - 4 - 000

GROUP	TYPE	G	PN	BASE FLANGE[1]	GLASS	GASKET	VARIANT
11	392	1) 1/2"	1) 16	1) 1.4404	1) Borosilicate glass according to DIN 7080 or similar	1) PTFE	000) Standard
		2) 1"	2) 40	2) 1.4571	4) Borosilicate glass[2] + PTFE wiper SGW	2) FKM	
		3) 1 1/2"	3) 63	3) Special	5) Borosilicate glass[2] + Silicone wiper SGW	3) NBR	
		4) 2"	4) 100			4) C4400	
		5) Special	5) 160			5) Silicone	
			6) Special			6) EPDM	
						7) Graphite	
						8) Special	

1) Cover flange according to quotation / order confirmation
2) In accordance with DIN 7080

Unless otherwise specified, the highlighted factory standard will be delivered.

EXAMPLE

The product code 11-392-2-1-2-1-4-000 corresponds to the standard configuration:
ACI Type 392
Thread G 1"
PN 16
Base flange made of 1.4571
Cover flange made of 1.4571
Borosilicate glass (DIN 7080 or similar)
Gasket KlingerSil® C4400

STRUCTURE

1. Screws
2. Cover flange
3. Glass cushion
4. Sight glass
5. Gasket
6. Base flange with threaded connection

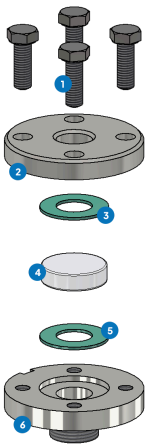

For aggressive media, FEP- or Halar®-coated sight glass plates can be used. For steam, Mica discs should be used to protect the glass.

Round Sight glass fitting Type 392 PN 16/160

with External thread / male thread for screwing in

Type 392

QUICK OVERVIEW

- max. 160 barg
- heat-resistant up to 280 °C
- for liquid media
- for gaseous media
- Nominal sizes ½" - 2"
- Custom designs possible
- Accessories available

OPERATING CONDITIONS

Operating conditions depend on the choice of glass and gaskets:

		Sight glass	Gaskets						
		Borosilicate glass (DIN 7080 or similar)	PTFE max. 200 °C	FKM max. 200 °C	NBR max. 80 °C	C4400 max. 175 °C	Silicone max. 180 °C	EPDM max. 130 °C	Graphite > 400 °C
TEMPERATURE	up to 80 °C	✓	✓	✓	✓	✓	✓	✓	✓
	up to 130 °C	✓	✓	✓	✗	✓	✓	✓	✓
	up to 175 °C	✓	✓	✓	✗	✓	✓	✗	✓
	up to 200 °C	✓	✓	✓	✗	✗	✗	✗	✓
	up to 280 °C	✓	✗	✗	✗	✗	✗	✗	✓
PRESSURE	up to 16 barg	✓	✓	✓	✓	✓	✓	✓	✓
	up to 40 barg	✓	✓	✗	✗	✓	✗	✗	✓
	up to 63 barg	✓	✗	✗	✗	✗	✗	✗	✓
	up to 100 barg	✓	✗	✗	✗	✗	✗	✗	✓
	up to 160 barg	✓	✗	✗	✗	✗	✗	✗	✓

✓ suitable ✗ unsuitable

OPTIONAL ACCESSORIES

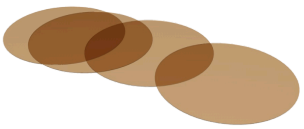

Round mica discs

> up to 320 °C with Borosilicate glass DIN 7080

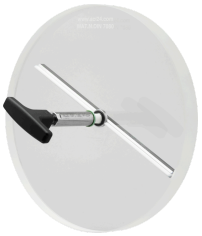

Sight glass wiper

> with PTFE, silicone, EPDM or FKM wipers



FEP protective screen / coating

> for high pH values

ACI Industriearmaturen GmbH

info@aci24.com
+49 (0) 2461 91634 00
www.aci24.com
+49 (0) 2461 91634 44
Königskamp 19 · 52428 Jülich · Germany